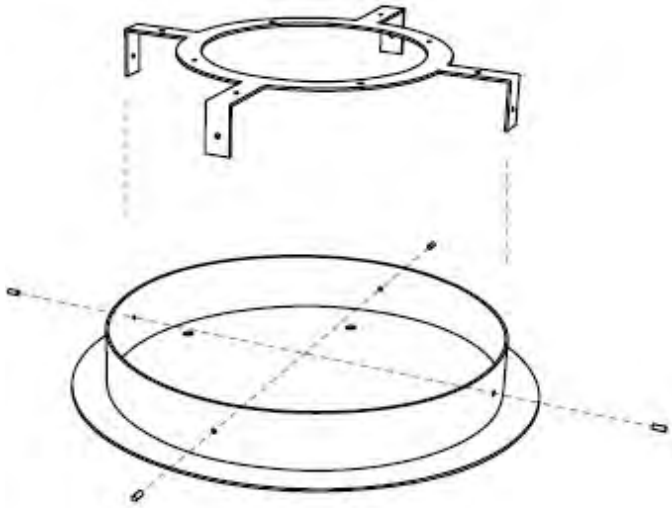

	x	y	w	z
PC917		53		400

Identification

Name

SHADOWS
RING METAL CANOPY

BROKIS

Type accessories (ACCS)
Collection SHADOWS
Line Exclusive Line
Designed by Lucie Koldová, Dan Yeffet

Description

Features

Round metal canopy is used to hang one set of Shadows (1 set = 5 luminaires Shadows).
The canopy is available in two colors.

Technology

Product Classification

Product Classification

Name	SHADOWS	RING METAL CANOPY	
SurfaceC			
	ALL		
		iron part -white matt powder coating	CCS618
		iron part - black matt powder coating	CCS619
Type			
		accessories (ACCS)	CPT197